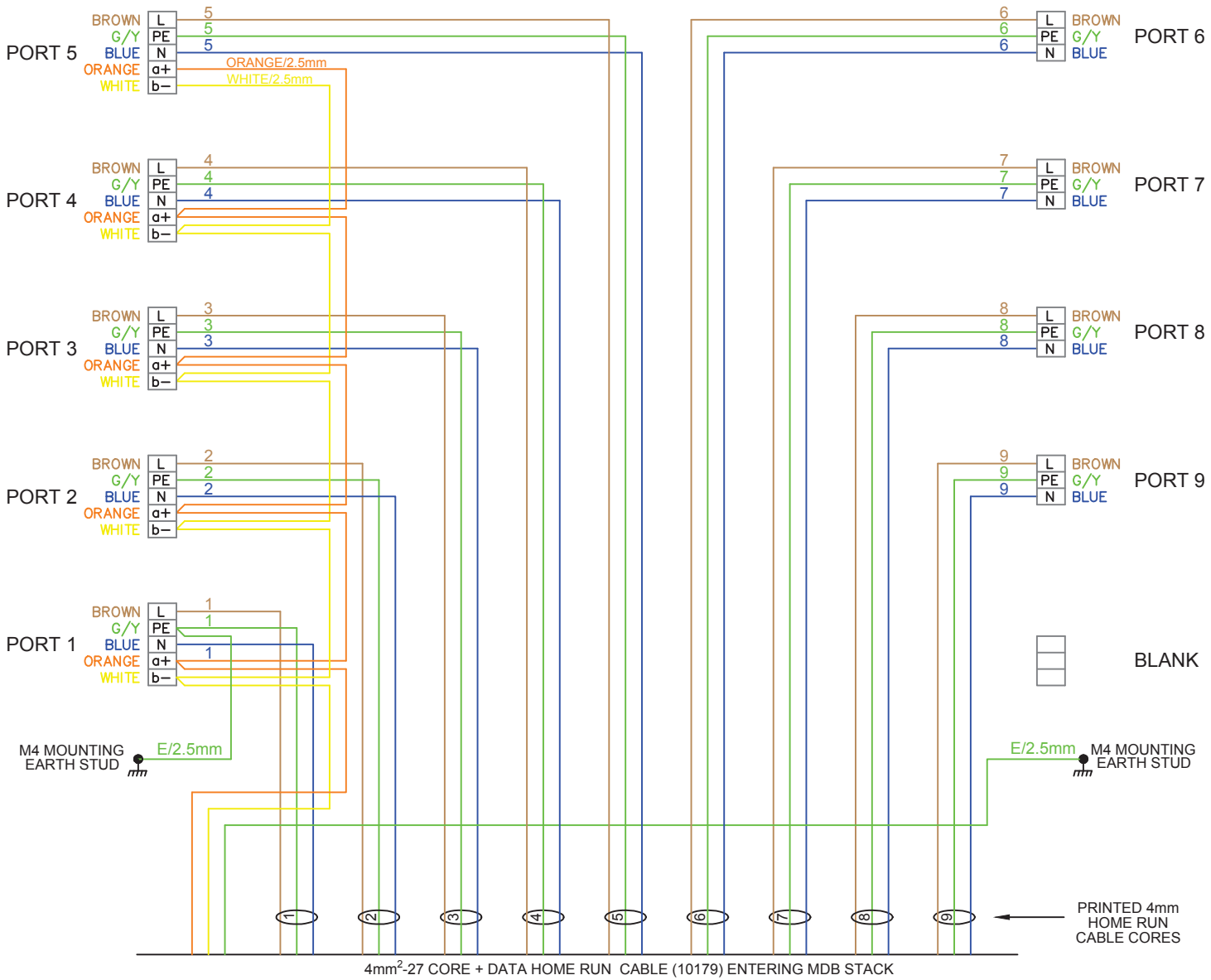

HL68935: 9 PORT 27 CORE 4mm² SPLIT DATA POWER ARMOURED MDB (ELECTRICAL VIEW)

MODULAR WIRING SYSTEMS LIMITED

PARK ROAD
HOLMEWOOD INDUSTRIAL PARK
HOLMEWOOD, CHESTERFIELD, S42 5UW
TELEPHONE: +44 (0) 1246 858 009
FAX: +44 (0) 1246 854 747
E-MAIL: ESTIMATES@MODWIRE.COM
WWW.MODULARWIRING.COM

LONDON OFFICE:
20 BIRCHIN LANE
LONDON, EC3V 3DU
TELEPHONE: +44 (0) 203 713 4640

REGISTRATION NO: 09310972

COPYRIGHT: 2019

REVISIONS

NO.	DESCRIPTION	DATE	BY

DRAWN BY: DL

CHK. BY: -

APPROVED: -

DATE: 11.03.19

MWS Ltd. policy is one of continual product development and as such, product may vary from the details shown.

MWS Ltd. reserves the right to change details without prior notice.

© MWS Ltd.

DRAWING No: HL68935

REVISION: -

SHT: 1/3

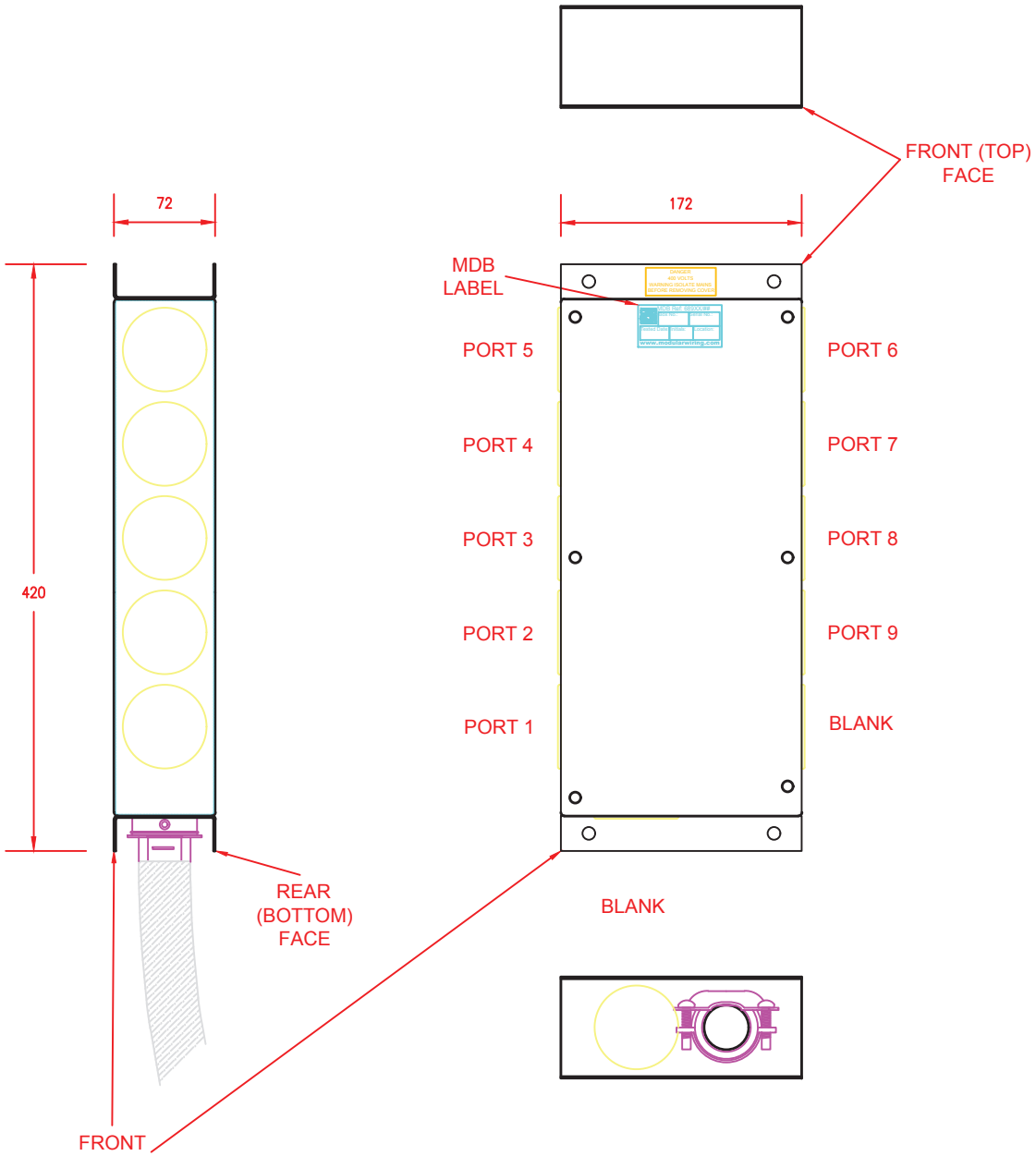

HL68935: 9 PORT 27 CORE 4mm^2 SPLIT DATA/POWER ARMOURED MDB (MECHANICAL VIEW)

MODULAR WIRING SYSTEMS
LIMITED
PARK ROAD
HOLMEWOOD INDUSTRIAL PARK
HOLMEWOOD, CHESTERFIELD, S42 5UW
TELEPHONE: +44 (0) 1246 858 009
FAX: +44 (0) 1246 854 747
E-MAIL: ESTIMATES@MODWIRE.COM
WWW.MODULARWIRING.COM

LONDON OFFICE:
20 BIRCHIN LANE
LONDON, EC3V 3DU
TELEPHONE: +44 (0) 203 713 4640

REGISTRATION NO: 09310972

REVISIONS

NO.	DESCRIPTION	DATE	BY

DRAWN BY: DL

CHK. BY: -

APPROVED: -

DATE: 11.03.19

MWS Ltd. policy is one of continual product development and as such, product may vary from the details shown.

MWS Ltd. reserves the right to change details without prior notice.

© MWS Ltd.

COPYRIGHT: 2019

DRAWING No:

HL68935

REVISION: -

SHT: 2/3

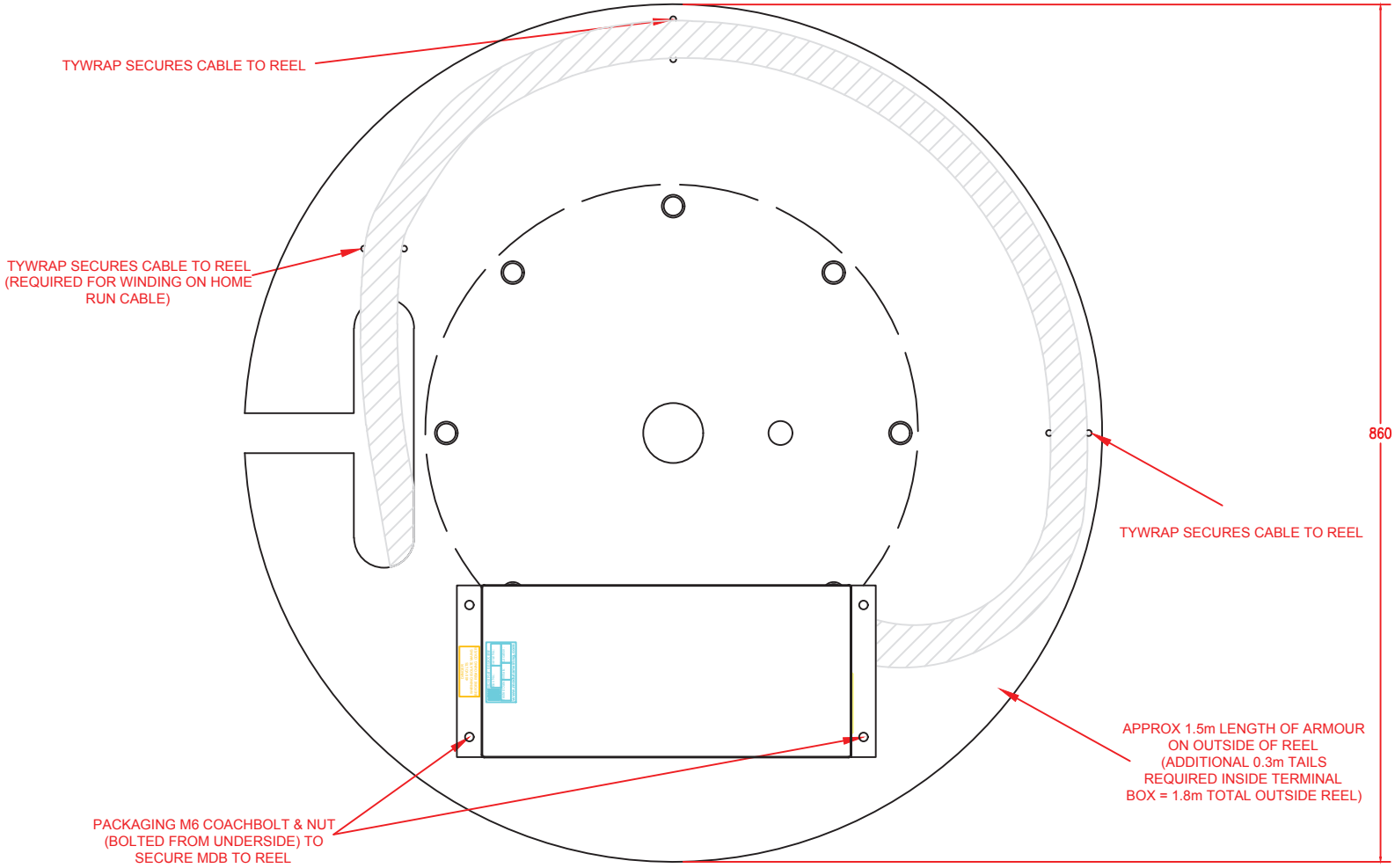

HL68935: 9 PORT 27 CORE 4mm^2 SPLIT DATA/POWER ARMOURED MDB (PACKAGING VIEW)

MODULAR WIRING SYSTEMS LIMITED

PARK ROAD
HOLMEWOOD INDUSTRIAL PARK
HOLMEWOOD, CHESTERFIELD, S42 5UW
TELEPHONE: +44 (0) 1246 858 009
FAX: +44 (0) 1246 854 747
E-MAIL: ESTIMATES@MODWIRE.COM
WWW.MODULARWIRING.COM

LONDON OFFICE:
20 BIRCHIN LANE
LONDON, EC3V 3DU
TELEPHONE: +44 (0) 203 713 4640

REGISTRATION NO: 09310972

REVISIONS

NO.	DESCRIPTION	DATE	BY

DRAWN BY: DL

CHK. BY: -

APPROVED: -

DATE: 11.03.19

MWS Ltd. policy is one of continual product development and as such, product may vary from the details shown.

MWS Ltd. reserves the right to change details without prior notice.

© MWS Ltd.

COPYRIGHT: 2019

DRAWING No: HL68935

REVISION: -

SHT: 3/3